STETSON BATH
FITTING INSTRUCTIONS

saneux

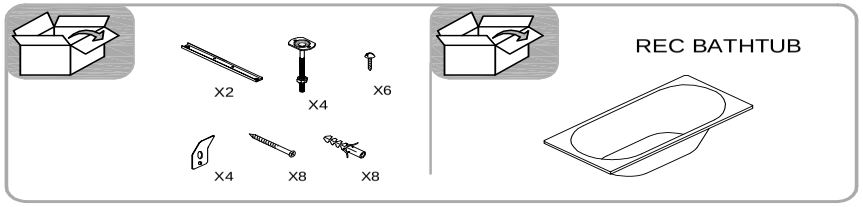

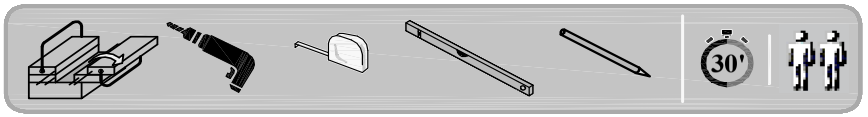

1.

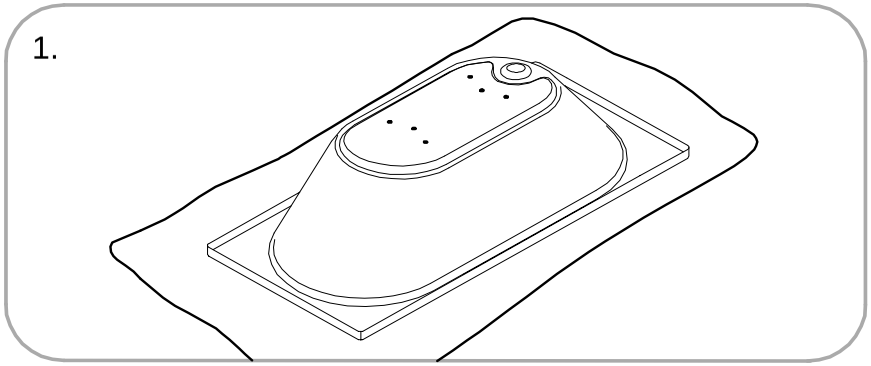

2.

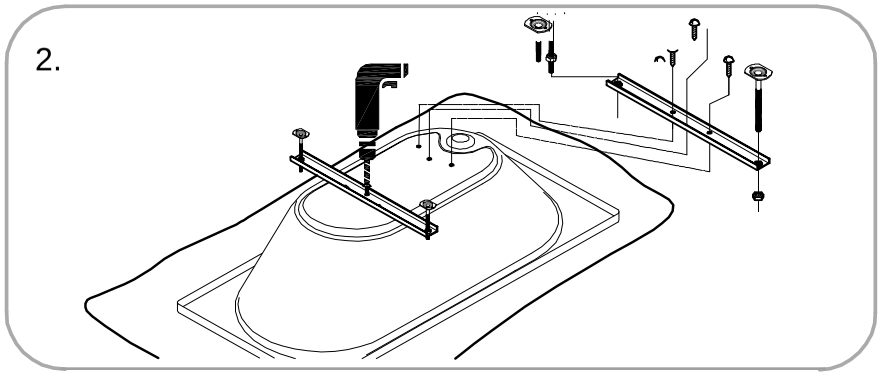

3.

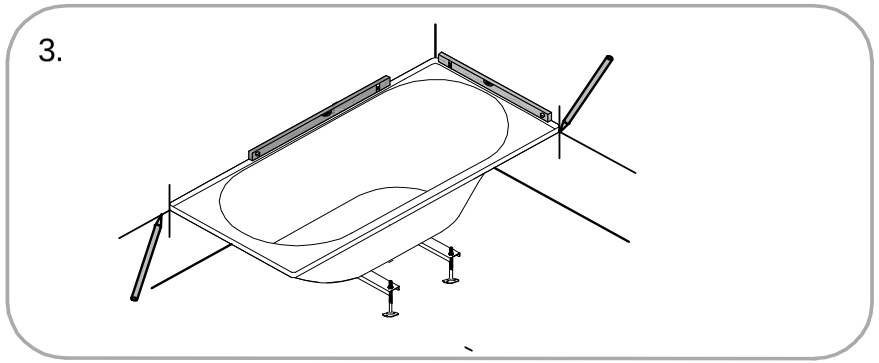

4.

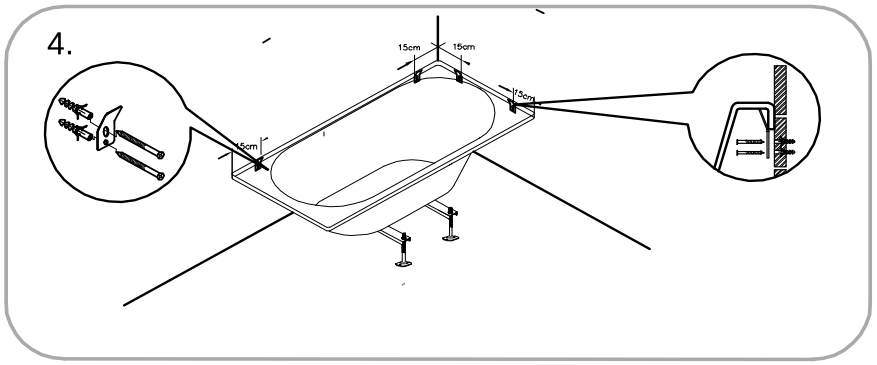

5.

12h

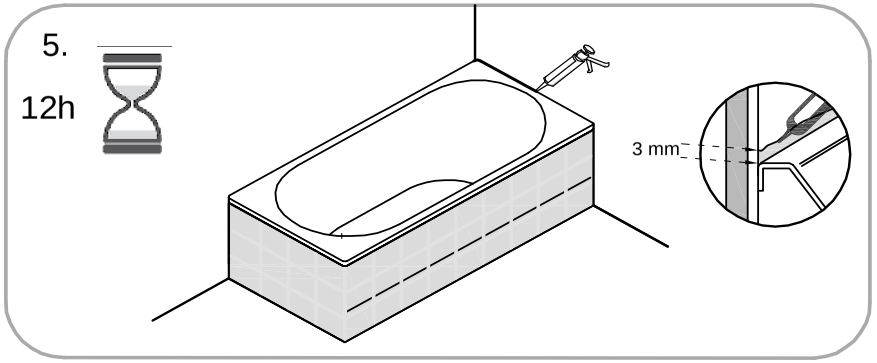

Care and Cleaning

Baths and shower trays should be cleaned regularly with warm soapy water. It is advisable that product should be cleaned immediately after use, rinsed with cold water and, for a long lasting shine, dried with a soft cloth. Care should be taken as the acrylic surface is softer than enamel or ceramic products and abrasive cleaners or cloths will scratch the surface. Should the bath or tray require a stronger cleaner, especially in a hard water area, a suitable cleaner can be used according to the manufacturer's recommendations. Contact with other household chemicals such as hair dyes, beach, disinfectants, perfumes and nail varnishes and removers should be avoided, and should be washed off immediately. Some soaps and shampoos can discolour acrylic if left neat on the surface. Children's toys sometimes use paints and dies that can mark the acrylic surface, these and minor scratches, can be polished out with 'T-cut' or similar product.